TCG TPM2 SOFTWARE STACK & EMBEDDED LINUX

Philip Tricca
philip.b.tricca@intel.com

AGENDA

Background

- Security basics
- Terms

TPM basics

- What it is / what it does
- Why this matters / specific features

TPM Software Stack

- Architecture / Design
- Getting Started
- Getting Results

LEVEL SET

There is no magic, there are no silver bullets

- “security” takes the whole village
- Architecture to implementation to maintenance
- There is no such thing as “a secure system”, only secure enough
- Ideally the informed CUSTOMER defines “secure enough”

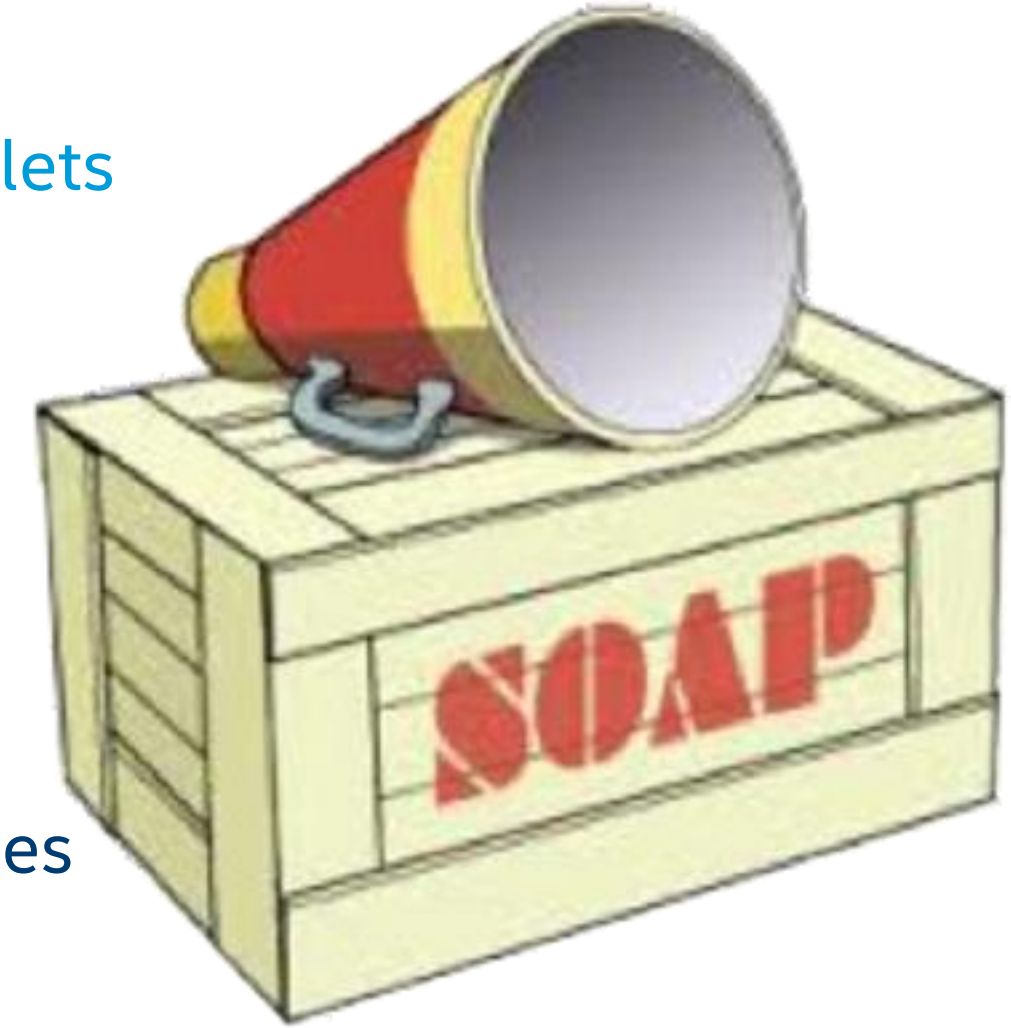

THE BASICS

Using the TPM does not a secure system make

- Disable services / exclude tools / minimize attack surface
- Use writable storage only when you must
- Regular updates, automatic updates! SIGNED UPDATES!
- Mandatory access control (SELinux!)
- Increase complexity in system, increase level of effort to secure it
  - Securing general purpose computers is a nightmare
  - Embedded systems -> security is more tractable

THREAT MODELING

A process by which we identify & document

- Assets
- Threats to them

- Prioritize: decide where your efforts are best spent
  - Identify trade-offs
- Accurately describe the properties of your system
  - What it protects against: risks mitigated
  - What it does not: risks accepted
  - And most importantly: why

IF YOUR TEAM DOESN'T MODEL THREATS …

Please do?

- Much of the body of knowledge was developed in Microsoft
- MSDN has lots of free content
  - https://msdn.microsoft.com/en-us/library/ff648644.aspx
- OWASP Application Threat Modeling
  - https://www.owasp.org/index.php/Application_Threat_Modeling
- Adam Shostack's book was my introduction (2014)
- Swiderski and Snyder book (2004)

TERMS

Classic security concepts:

- Confidentiality
- Integrity
- Authentication
- Authorization (satisfy TPM2 policy)
- Non-repudiation

Use the TPM2 to build systems that implement these principles

WHAT IS A TPM?

Small Crypto Engine

- Cryptographic functions
- Hashing functions
- Key generation & protection
- RNG
- Integrity measurement / reporting

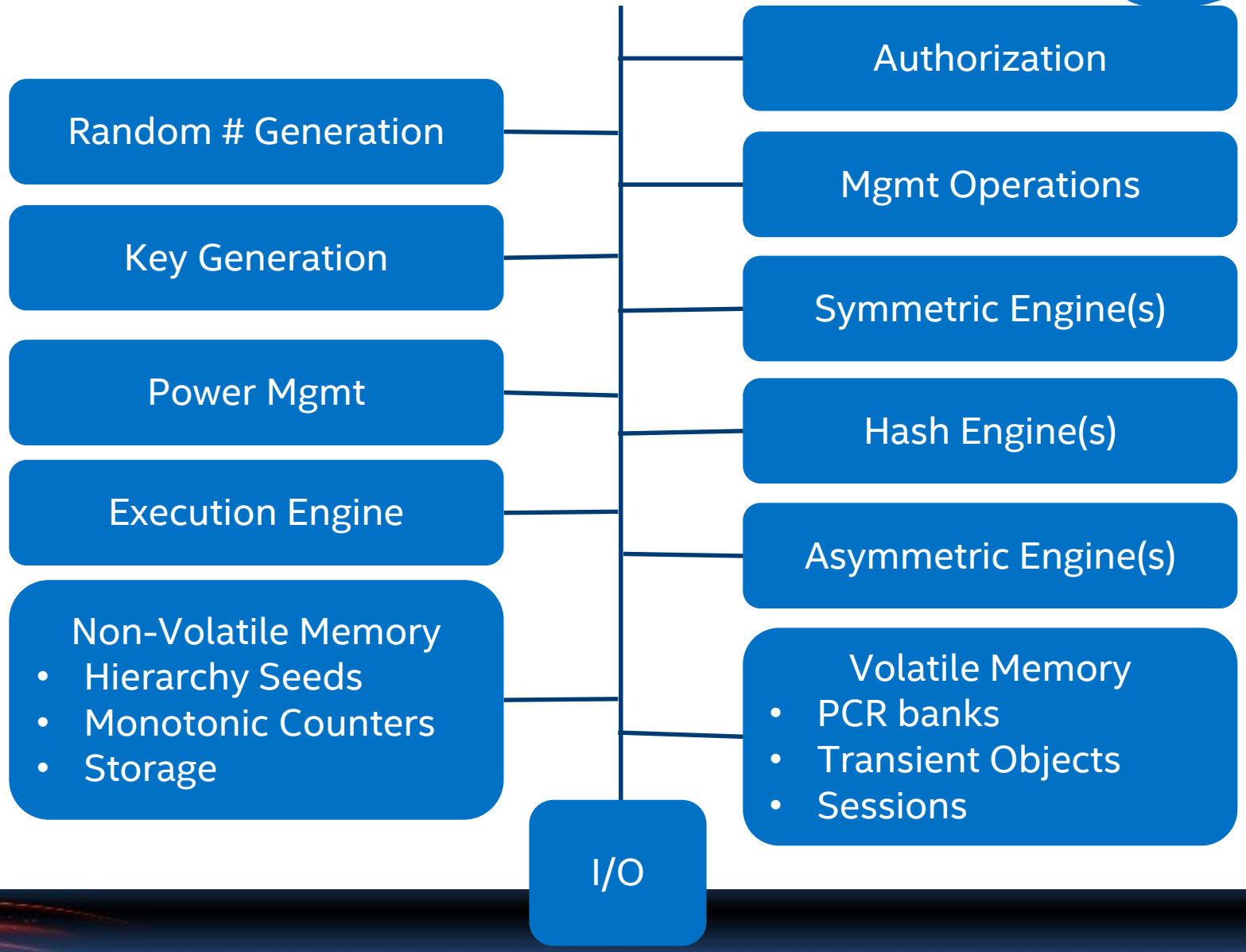

TPM2 IMPLEMENTATION: DOMAIN SEPARATION

Discrete IP Block
(a chip)

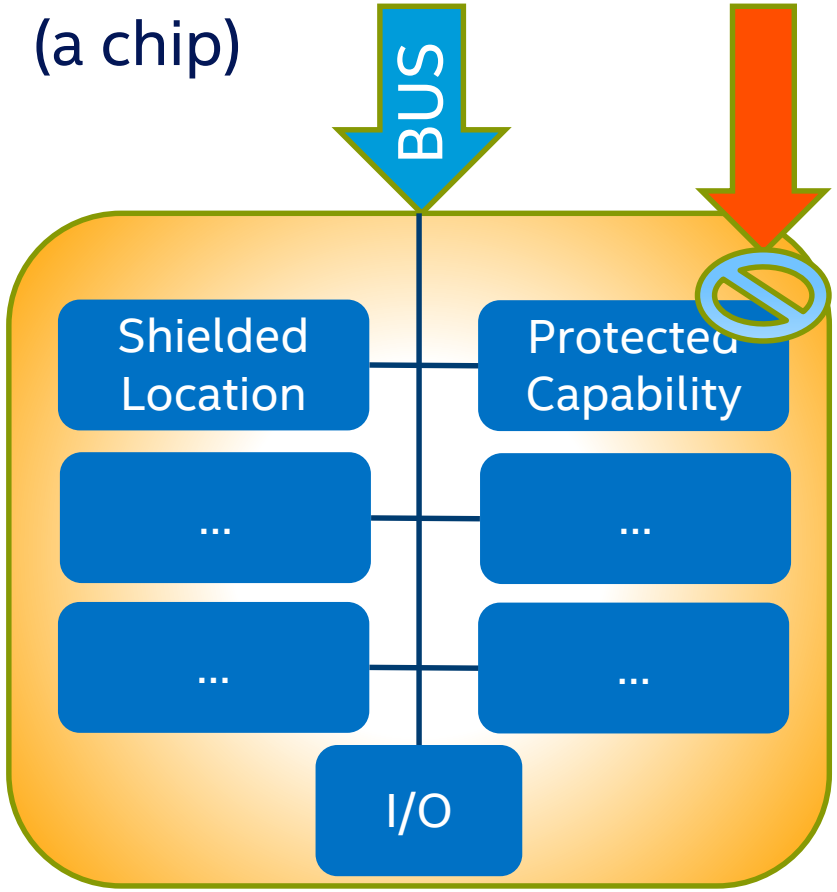

Integrated IP Block

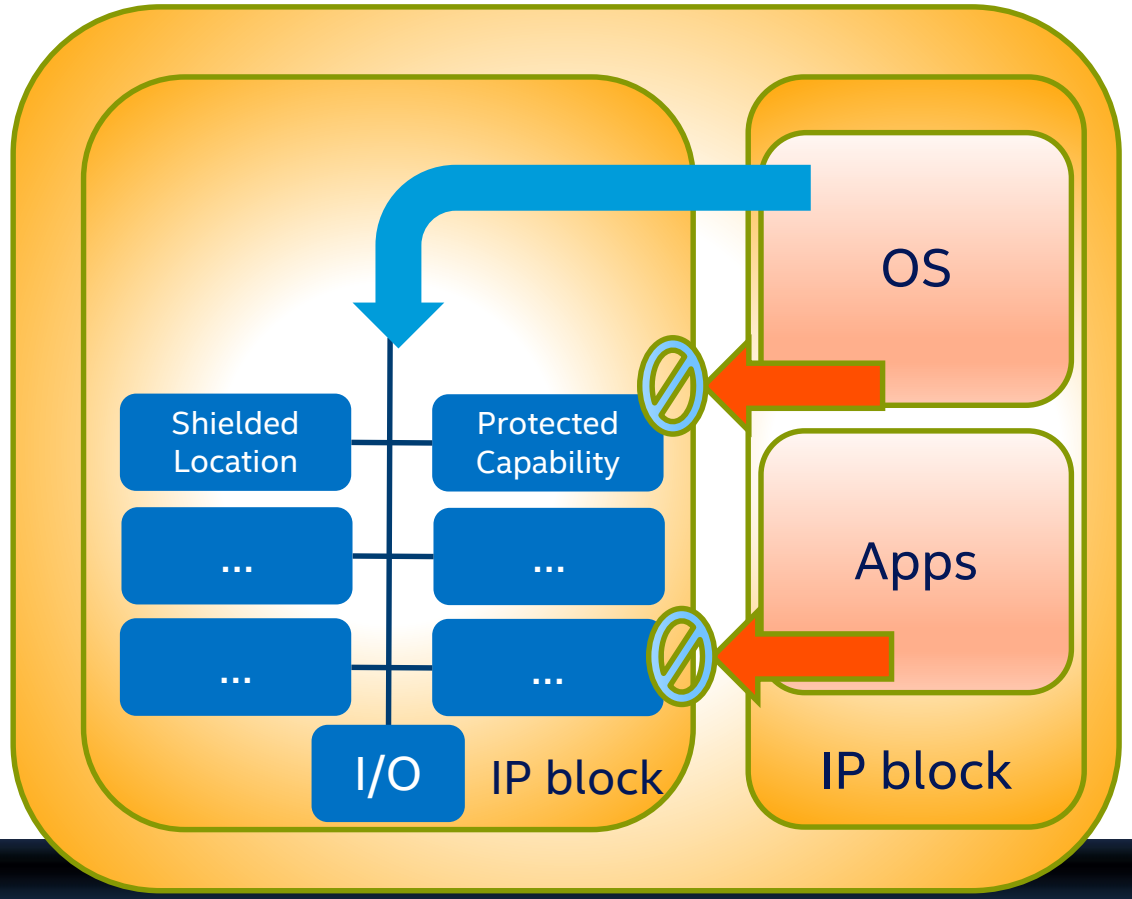

TPM PROTECTIONS

Documented in TPM Rev 2.0 Part-1: Architecture

- Frames protections offered by TPM2 in section 10:
  - Protected Capability
  - Shielded Location
  - Protected Object
- Protected capabilities must TPM severely memory constrained
  - offload storage to application / Resource Manager
  - encrypt protected objects when not in shielded location
- Nature of physical security protections dictated by customer

INTEGRITY: MEASURED BOOT

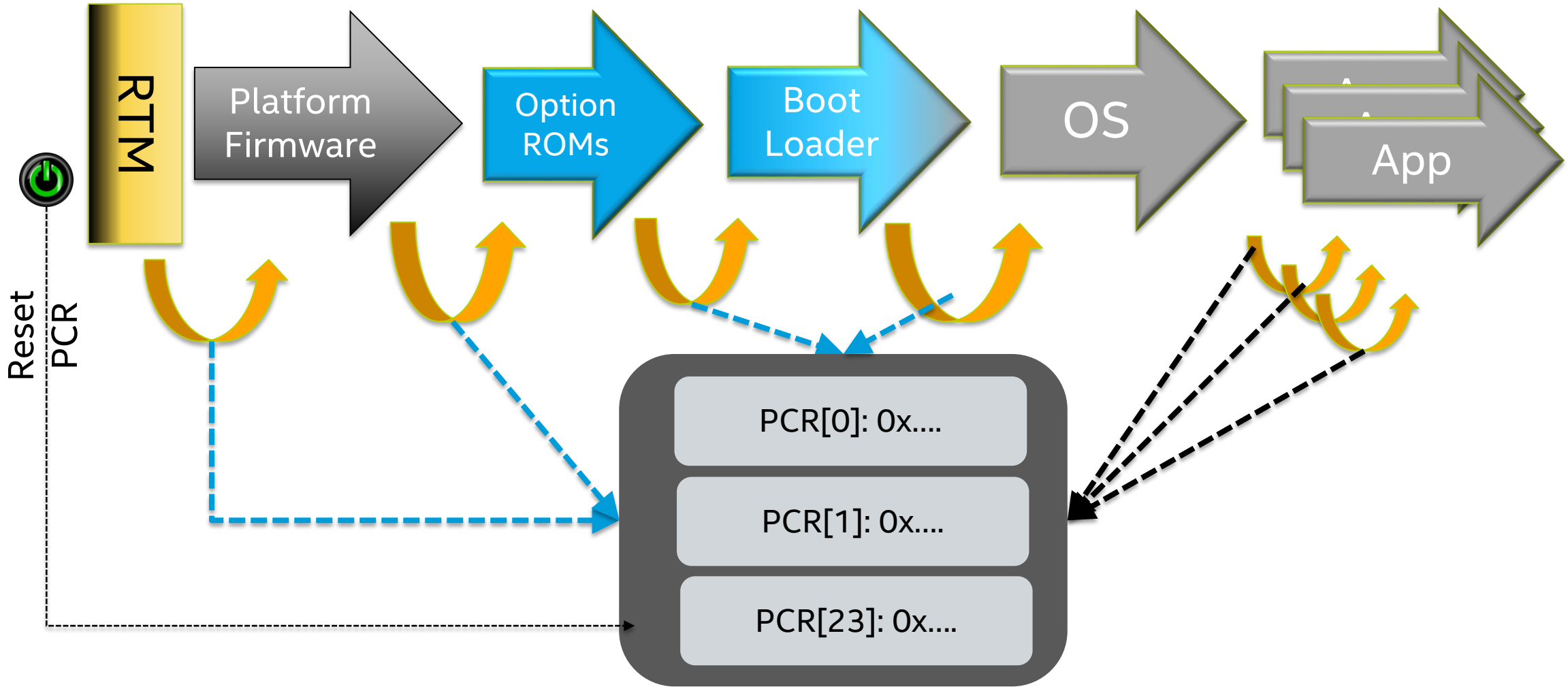

INTEGRITY: MEASURED BOOT

Platform Configuration Register (PCR) & the “Extend” operation

- PCR is a Shielded Location, Extend operation is Protected Capability
- PCR is volatile memory capable of holding hash value
- Typically 24 PCRs in a TPM, addressed with index: PCR[0] – PCR[23]
- PCR usage (hashes of components) defined in TCG platform specs

Software Measurement is synonymous with the hash produced

- Extend hash of object (executable, config etc) into PCR
- Extend: $PCR[0]_N = H(PCR[0]_{N-1} \mid X)$
- Requires hash function: computationally infeasible to forge, easy to verify

TCG TPM2 SOFTWARE STACK: DESIGN GOALS

System API (SYS)

- 1:1 mapping to TPM2 commands
- No
  - file IO
  - crypto
  - heap

Enhanced SAPI (ESYS)

- 1:1 mapping to TPM2 Commands
- Additional commands for utility functions
- Provides Cryptographic functions for sessions
- No file IO
- Requires heap

Feature API (FAPI)

- File IO
- Requires heap
- Must be able to do retries
- Context based state
- Must support the possibility of reduced application code size by offering static libraries

TPM Command Transmission Interface (TCTI)

- Abstract command / response mechanism
- Decouple APIs driving TPM from command transport / IPC
- No crypto
- No heap, file I/O

TPM Access Broker and Resource Manager (TABRM)

- Power management
- Potentially no file IO – depends on power mgmt.
- Abstract Limitations of TPM Storage
- No crypto

TPM2 SOFTWARE STACK

System API & TCTI specification

- TPM2 Command Transmission Interface (TCTI)
  - Abstraction to hide details of IPC mechanism
  - libtcti-device & libtcti-socket
  - Adds flexibility missing from 1.2 TSS
- System API (SAPI)
  - Serialize C structures to TPM command buffers
  - One-to-one mapping to TPM commands (all 100+)
  - Minimal external dependencies: libc
  - Suitable for highly embedded applications / UEFI

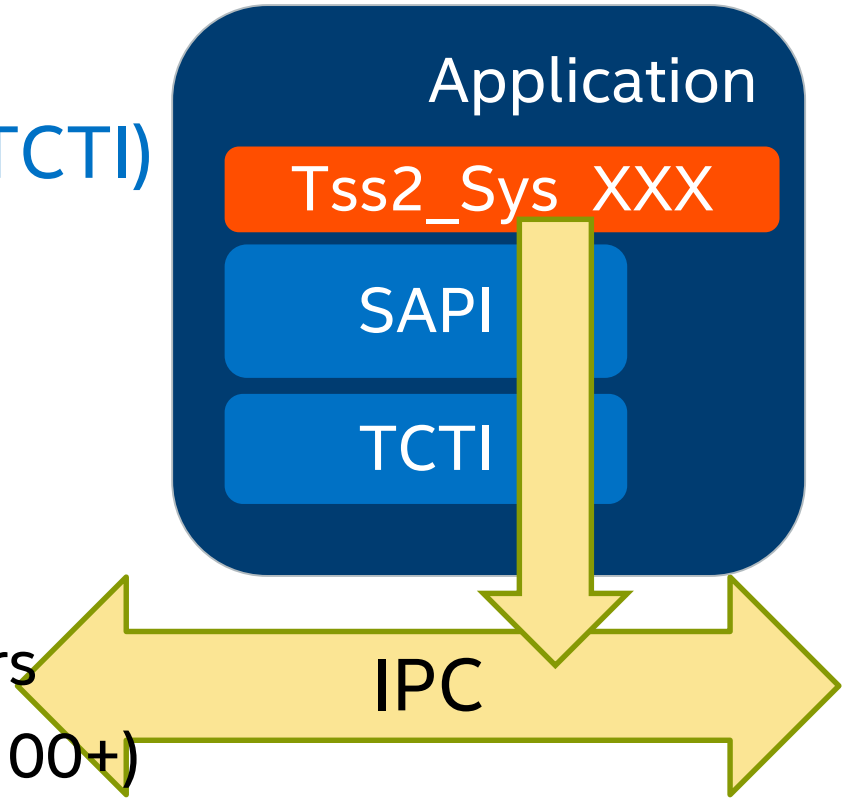

TPM2 TSS COMPONENTS: W/ RESOURCEMGR

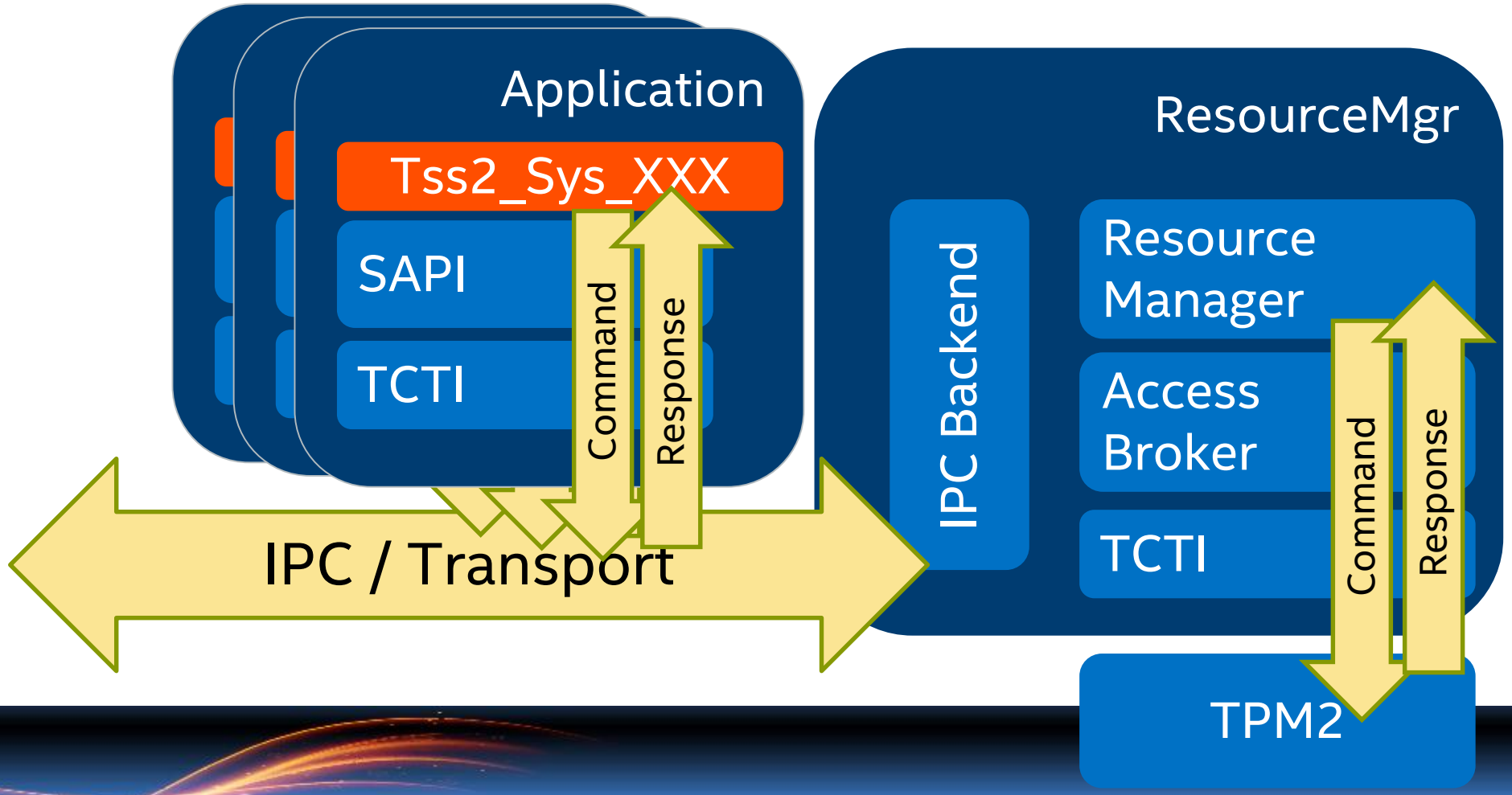

IMPLEMENTATION & CODE

Intel implementing TCG TSS as Open Source

- Project hosted under '01.org' on Github
  - https://github.com/01org/tpm2.0-tss
  - https://github.com/01org/tpm2.0-tools
- 3-clause BSD == maximum flexibility
- Development on GitHub "in the open"
  - I don't always have the answer, someone else may though
  - Packages working their way into distros
- Lots of churn in the next few months

EMBEDDED BUILDS

My personal OSS work

- meta-measured https://github.com/flihp/meta-measured
  - TPM1.2 & 2.0 packages
  - Reference 'live' images & initrds
  - Grub2 patches extend measured launch (soon obsoleted by upstream!)
  - + BSP for Minnowboard Max to add TPM2 support as MACHINE_FEATURE
- Working on ARM reference platform + Infineon SPI TPM
  - Still some work in TSS code to support big-endian systems (facepalm)

USE CASE: RNG

TPM requires RNG for key creation, nonce generation.

- an entropy source and collector
- mixing function (typically, an approved hash function)
- Differentiation between TPMs w/ certification (NIST SP800-90 A)
- TPM RNG integrated with Linux kernel RNG
  - If you need an entropy source DO NOT use TPM RNG alone
  - Load the ‘tpm_rng’ kernel driver & setup rng-tools
  - Use /dev/(u)?random
  - https://scotte.org/2015/07/TPM-for-better-random-entropy

USE CASE: CRYPTO OPERATIONS

TPM2 for basic crypto: sign / encrypt / hash

- HMAC required for authorization
- Asymmetric algorithm, RSA 2k for compatibility, usually ECC
- See Davide Guerri's blog for a great howto: https://dguerriblog.wordpress.com/2016/03/03/tpm2-0-and-openssl-on-linux-2/
  - tpm2_getpubek: create TPM2 primary key & export pub & name
  - tpm2_getpubak: create TPM2 signing key & export pub & name
  - tpm2_hash: hash some file / data & generate ticket
  - tpm2_sign: use key (from getpubak) to sign hash

USE CASE: SEALED STORAGE AKA LOCAL ATTESTATION

TPM2 policy authorization as access control on TPM protected object

- Microsoft Bitlocker uses this mechanism for disk crypto keys
- OpenXT virtualization system uses similar mechanism
- Assumes measured boot records TCB in PCRs: software identity
  - Create TPM object holding auth data for disk crypto
  - Bind object to PCR policy: select PCRs based on TCB & requirements
  - On successful boot w/ PCRs in expected state, load object
  - Can be used to hold secrets for LUKS volumes

SHOUT-OUTS!

Many thanks for contributions to materials:

- Monty Wiseman @ General Electric
- Andreas Fuchs @ Fraunhofer SIT
- Lee Willson @ Security Innovation

& Everyone who's contributed code / answered questions on GitHub!

- Bill Roberts @ Intel OTC
- Imran Desai @ Intel IOTG

THANKS!

RESOURCES(1)

Threat Modeling: Designing for Security – Adam Shostack

- http://www.wiley.com/WileyCDA/WileyTitle/productCd-1118809998.html

Trusted Platforms UEFI, PI and TCG-based firmware

- https://people.eecs.berkeley.edu/~kubitron/cs194-24/hand-outs/SF09_EFIS001_UEFI_PI_TCG_White_Paper.pdf

Open Security Training Trusted Computing Module:

- http://opensecuritytraining.info/IntroToTrustedComputing

RESOURCES(2)

Davide Guerri TPM2.0 talk @ FOSDEM

- https://fosdem.org/2017/schedule/event/tpm2/

TPM RNG linux howto:

- https://scotte.org/2015/07/TPM-for-better-random-entropy